NOVA LUCE

9019758

1

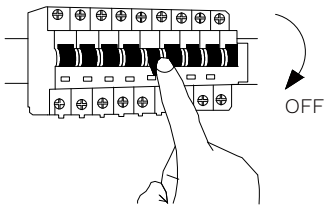

Turn off the general switch

2

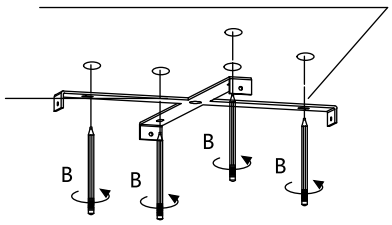

Mark & drill holes

3

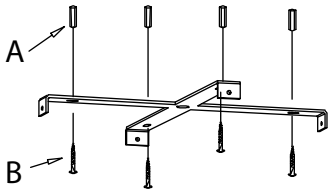

Apply plastic anchors with screws

4

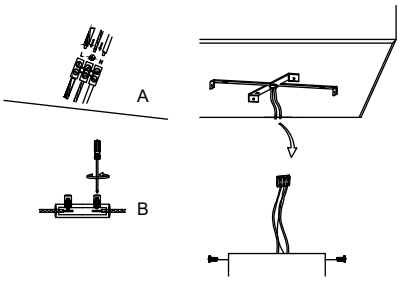

Connect the wires

5

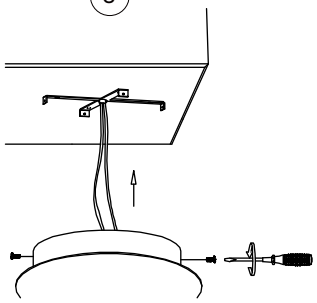

Apply the side screws

5

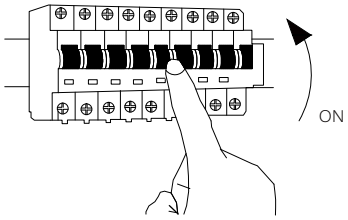

Turn on the general switch

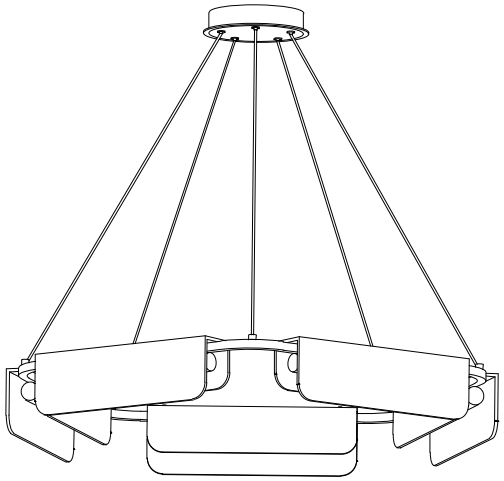

www.novaluce.com